Work Order ID 66859

Tuesday, March 01, 2011 8:05:22 AM

Item ID: D3637-041 **Accept** **Setup Start**

Revision ID:

Item Name: Bracket Assembly **Stop**

Start Date: 3/1/2011 **Start Qty:** 8.00 **Cust Item ID:**

Required Date: 3/7/2011 **Req'd Qty:** 8.00 **Customer:**

Reference:

Approvals: **Process Plan:** _____ **Date:** 11-03-1 **Tooling:** _____ **Date:** _____ **Run Start**

QC: _____ **Date:** _____ **SPC (Y/N):** _____ **Date:** _____ **Stop**

Sequence ID/ Work Center ID	Operation Description	Set Up/ Run Hours	Tool ID	Tool #	Plan Code	Accept Qty	Reject Qty	Reject Number	Insp. Stamp
Draw Nbr	**Revision Nbr**								
D3637	Rev B								
100	FLOW WATER JET	0.00							
Waterjet	**Memo**	0.00				1B 11-3-2			
FLOW CNC Waterjet 304.080	1-Cut as per Dwg D3637 ☐Dwg Rev: B ☐Prog Rev: B ☐2-Deburr if necessary								
110	QC2- Inspect parts off machine FAI/FAIB	0.00							
QC	**Memo**	0.00				1B 11-3-2			
Quality Control									
120	QC8- Inspect parts - second check	0.00							
QC	**Memo**	0.00							
Quality Control									

Dart Aerospace Ltd

W/O:		WORK ORDER CHANGES					
DATE	STEP	PROCEDURE CHANGE	By	Date	Qty	Approval Chief Eng / Prod Mgr	Approval QC Inspector

Part No: _____ **PAR #:** _____ **Fault Category:** _____ **NCR:** Yes No **DQA:** _____ **Date:** _____

Resolution: _____ **Disposition:** _____ **QA: N/C Closed:** _____ **Date:** _____

NCR:		WORK ORDER NON-CONFORMANCE (NCR)						
DATE	STEP	Description of NC Section A	Corrective Action Section B			Verification Section C	Approval Chief Eng	Approval QC Inspector
			Initial Chief Eng	Action Description Chief Eng	Sign & Date			

NOTE: Date & initial all entries

H:\FORMS\Quality Assurance\approved QA\NCRWO RevE

Work Order ID 66859

Tuesday, March 01, 2011 8:05:22 AM

Item ID: D3637-041 **Accept** **Setup Start** **Stop**

Revision ID:

Item Name: Bracket Assembly

Start Date: 3/1/2011 **Start Qty:** 8.00 **Cust Item ID:**

Required Date: 3/7/2011 **Req'd Qty:** 8.00 **Customer:**

Reference:

Approvals: **Process Plan:** _____ **Date:** _____ **Tooling:** _____ **Date:** _____ **Run Start** **Stop**

QC: _____ **Date:** _____ **SPC (Y/N):** _____ **Date:** _____

Sequence ID/ Work Center ID	Operation Description	Set Up/ Run Hours	Tool ID	Tool #	Plan Code	Accept Qty	Reject Qty	Reject Number	Insp. Stamp
130 Brake NC Brake NC	NC BRAKE **Memo** Form as per Dwg D3637	0.00 0.00 SB 11/03/02				15			
140 Small Fab Small Fab	Small Fab **Memo** 1- drill holes as per dwg using DT8979□2-C'Sink as per Dwg D3637 □3-Install Nut plate as per Dwg D3637	0.00 0.00				11/03/03 15			
150 QC Quality Control	QC5- Inspect part completeness to step on W/O **Memo**	0.00 0.00				11 03 03 15			

Dart Aerospace Ltd

W/O:		WORK ORDER CHANGES					
DATE	STEP	PROCEDURE CHANGE	By	Date	Qty	Approval Chief Eng / Prod Mgr	Approval QC Inspector

Part No: _____ **PAR #:** _____ **Fault Category:** _____ **NCR:** Yes No **DQA:** _____ **Date:** _____

Resolution: _____ **Disposition:** _____ **QA: N/C Closed:** _____ **Date:** _____

NCR:		WORK ORDER NON-CONFORMANCE (NCR)						
DATE	STEP	Description of NC Section A	Corrective Action Section B			Verification Section C	Approval Chief Eng	Approval QC Inspector
			Initial Chief Eng	Action Description Chief Eng	Sign & Date			

NOTE: Date & initial all entries

H:\fFORMS\Quality Assurance\approved QA\NCRWO RevE

Work Order ID 66859

Tuesday, March 01, 2011 8:05:22 AM

Item ID: D3637-041
Revision ID:
Item Name: Bracket Assembly
Start Date: 3/1/2011 **Start Qty:** 8.00
Required Date: 3/7/2011 **Req'd Qty:** 8.00
Reference:

Accept

Setup **Start**
Stop

Cust Item ID:
Customer:

Run **Start**
Stop

Approvals: **Process Plan:** _____ **Date:** _____ **Tooling:** _____ **Date:** _____
QC: _____ **Date:** _____ **SPC (Y/N):** _____ **Date:** _____

Sequence ID/ Work Center ID	Operation Description	Set Up/ Run Hours	Tool ID	Tool #	Plan Code	Accept Qty	Reject Qty	Reject Number	Insp. Stamp
160 Packaging	Identify as per dwg & Stock Location:_____	0.00				11/3/4	sl	(150)	
Packaging	**Memo**	0.00							
170 QC	QC21- Final Inspection - Work Order Release	0.00					11/03/04		
Quality Control	**Memo**	0.00							

11-03-04

Dart Aerospace Ltd

W/O:		WORK ORDER CHANGES					
DATE	STEP	PROCEDURE CHANGE	By	Date	Qty	Approval Chief Eng / Prod Mgr	Approval QC Inspector

Part No: _____ **PAR #:** _____ **Fault Category:** _____ **NCR:** Yes No **DQA:** _____ **Date:** _____

Resolution: _____ **Disposition:** _____ **QA: N/C Closed:** _____ **Date:** _____

NCR:		WORK ORDER NON-CONFORMANCE (NCR)						
DATE	STEP	Description of NC Section A	Corrective Action Section B			Verification Section C	Approval Chief Eng	Approval QC Inspector
			Initial Chief Eng	Action Description Chief Eng	Sign & Date			

NOTE: Date & initial all entries

H:\fFORMS\Quality Assurance\approved QA\NCRWO RevE

Picklist Print

Tuesday, March 01, 2011 8:05:28 AM

Work Order ID: 66859

Parent Item: D3637-041

Parent Item Name: Bracket Assembly

Start Date: 3/1/2011 **Required Date:** 3/7/2011

Start Qty: 8.00 **Required Qty:** 8.00

Comments: IPP Rev:A New Issue 07-07-20 JLM Verified By:EC
IPP Rev:B change to REV.B as per dwg 08-02-11 DD verified by:ec

Component Item ID/ Item Name	Replacement Item ID	Mfg/ Purch	Bin Item	Primary Location	Last Location	Route Seq ID	Unit of Measure	Qty on Hand	Qty per Kit	Total Qty	Qty Issued	Date Issued	Status
MS20426AD3-3 Rivet		Purchased	No			100	Each	3,333.000	2	16			
				Location			**Loc Qty**		**Loc Code**				
				ST316			3333						
					19099		3333			30			
M304S14GA 304SS sheet .080		Purchased	No			140	sf	70.7108	0.09	0.757895			
				Location			**Loc Qty**		**Loc Code**				
				MAT20 115953			70.7108			115953			
					113295		70.7108						
MS21059L4 Nutplate		Purchased	No			140	Each	61.0000	1	8			
				Location			**Loc Qty**		**Loc Code**				
				ST301			61						
					116582		61			15			

Dart Aerospace Ltd

W/O:		WORK ORDER CHANGES					
DATE	STEP	PROCEDURE CHANGE	By	Date	Qty	Approval Chief Eng / Prod Mgr	Approval QC Inspector

Part No: _____ **PAR #:** _____ **Fault Category:** _____ **NCR:** Yes No **DQA:** _____ **Date:** _____

Resolution: _____ **Disposition:** _____ **QA: N/C Closed:** _____ **Date:** _____

NCR:		WORK ORDER NON-CONFORMANCE (NCR)						
DATE	STEP	Description of NC Section A	Corrective Action Section B			Verification Section C	Approval Chief Eng	Approval QC Inspector
			Initial Chief Eng	Action Description Chief Eng	Sign & Date			

NOTE: Date & initial all entries

H:\fFORMS\Quality Assurance\approved QA\NCRWO RevE

DART AEROSPACE LTD	Work Order:	66859
Description: Bracket	Part Number:	D3637-1
Inspection Dwg: D3637 **Rev:** B		Page 1 of 1

FIRST ARTICLE INSPECTION CHECKLIST

[X] First Article [ ] Prototype

Drawing Dimension	Tolerance	Actual Dimension	Accept	Reject	Method of Inspection	Comments
Ø0.098	+0.004/-0.001	.102	✓		V IBUZ	
Ø0.328	+0.006/-0.001	.333	✓		V	
3.63	+/-0.030	3.636	✓		V	
3.60	+/-0.030	3.592	✓		V	
1.80	+/-0.030	1.801	✓		V	
0.500	+/-0.010	.501	✓		V	
1.82	+/-0.030	1.810	✓		V	

Measured by:	IB	Audited by:	S	Prototype Approval:	N/A
Date:	11-3-2	Date:	11/03/12	Date:	N/A

Rev	Date	Change		Revised by	Approved
A	08.04.15	New Issue	P/O D3637-041	KJ/DD	

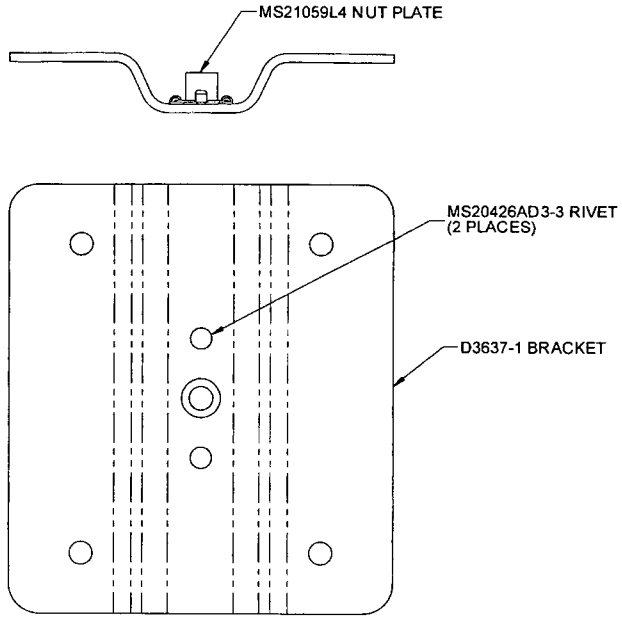

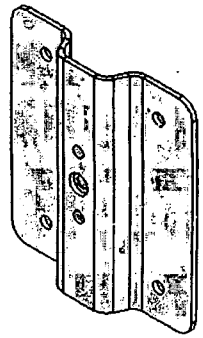

SHOP COPY
RETURN TO
ENGINEERING
UNCONTROLLED COPY
SUBJECT TO AMENDMENT
WITHOUT NOTICE
WORK ORDER
NO. 64859
PN-031

D3637-041 BRACKET ASSEMBLY
(WAS GENEVA P/N G10602-1)

D3637-041 PARTS:

QTY	P/N	DESCRIPTION
X	D3637-041	BRACKET ASSEMBLY
1	D3637-1	BRACKET
1	MS21059L4	NUTPLATE
2	MS20426AD3-3	RIVET

RELEASED
06.02.05

D3637-041 NOTES:
1) MATERIAL: N/A
2) FINISH: N/A
3) TOLERANCES: N/A
4) UNITS: N/A
5) BREAK SHARP EDGES: N/A
6) IDENTIFICATION: IDENTIFY WITH DART P/N "D3637-041" USING FINE POINT PERMANENT INK MARKER
7) WEIGHT: 0.27 lbs

REV.	DESCRIPTION	BY	DATE
B	FOR D3637-1, 1 15 WAS 1.30 & "REF" REMOVED FROM ANGLE	LE	07.12.18
A	NEW ISSUE; REPLACES G10608, G10602 & G10609	LE	07.07.27

DESIGN	TS	DART AEROSPACE LTD HAWKESBURY, ONTARIO, CANADA	
DRAWN	LE		
CHECKED		DRAWING NO. D3637	REV. B SHEET 1 OF 3
MFG. APPR.			
APPROVED		TITLE BRACKET	SCALE 1:1
DE APPR.			
DATE	07.12.18		

Dart Aerospace Ltd

W/O:		WORK ORDER CHANGES					
DATE	STEP	PROCEDURE CHANGE	By	Date	Qty	Approval Chief Eng / Prod Mgr	Approval QC Inspector

Part No: _____ **PAR #:** _____ **Fault Category:** _____ **NCR:** Yes No **DQA:** _____ **Date:** _____

Resolution: _____ **Disposition:** _____ **QA: N/C Closed:** _____ **Date:** _____

NCR:		WORK ORDER NON-CONFORMANCE (NCR)						
DATE	STEP	Description of NC Section A	Corrective Action Section B			Verification Section C	Approval Chief Eng	Approval QC Inspector
			Initial Chief Eng	Action Description Chief Eng	Sign & Date			

NOTE: Date & initial all entries

H:\fFORMS\Quality Assurance\approved QA\NCRWO RevE

w/o 44859

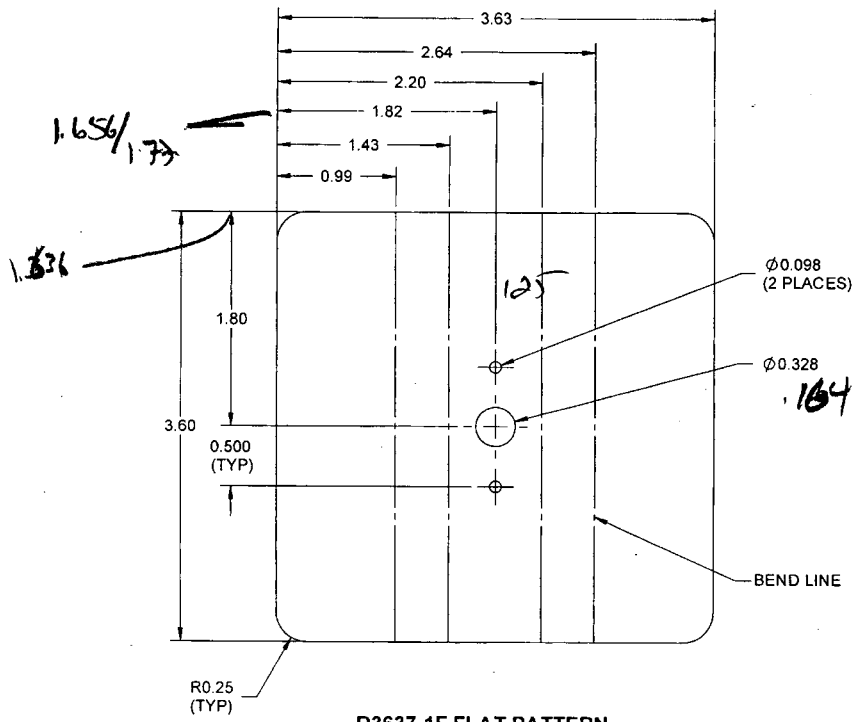

D3637-1F FLAT PATTERN

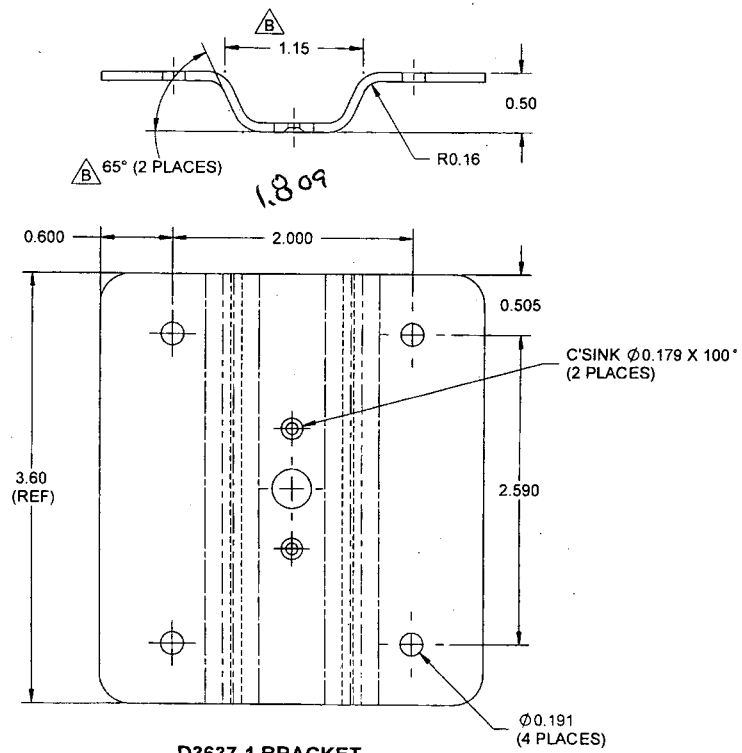

D3637-1 BRACKET
(WAS GENEVA P/N C10608-1)

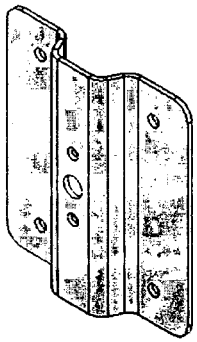

RELEASED
08.02.05

D3637-1 NOTES:
1) MATERIAL: AISI 304/316 SS SHEET, 14 GAUGE PER MIL-S-5059
(REF DART SPEC M304S14GA)
2) FINISH: NONE
3) TOLERANCES: PER DART QSI 018 UNLESS OTHERWISE NOTED
4) UNITS: INCHES UNLESS OTHERWISE NOTED
5) BREAK SHARP EDGES: 0.005 TO 0.010 MAX
6) IDENTIFICATION: NONE
7) WEIGHT: 0.26 lbs

DESIGN	TS	DART AEROSPACE LTD HAWKESBURY, ONTARIO, CANADA
DRAWN		
CHECKED		DRAWING NO. D3637 — REV. B — SHEET 2 OF 3
MFG. APPR.		
APPROVED		TITLE: BRACKET — SCALE 1:1
DE APPR.		
DATE	07.12.18	

Dart Aerospace Ltd

W/O:		WORK ORDER CHANGES					
DATE	STEP	PROCEDURE CHANGE	By	Date	Qty	Approval Chief Eng / Prod Mgr	Approval QC Inspector

Part No: _____ **PAR #:** _____ **Fault Category:** _____ **NCR:** Yes No **DQA:** _____ **Date:** _____

Resolution: _____ **Disposition:** _____ **QA: N/C Closed:** _____ **Date:** _____

NCR:		WORK ORDER NON-CONFORMANCE (NCR)						
DATE	STEP	Description of NC Section A	Corrective Action Section B			Verification Section C	Approval Chief Eng	Approval QC Inspector
			Initial Chief Eng	Action Description Chief Eng	Sign & Date			

NOTE: Date & initial all entries

H:\fFORMS\Quality Assurance\approved QA\NCRWO RevE

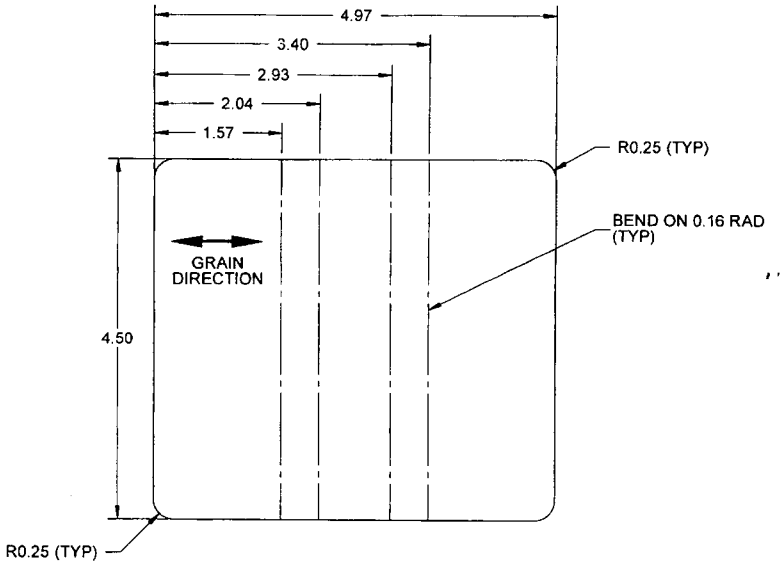

D3637-3F FLAT PATTERN

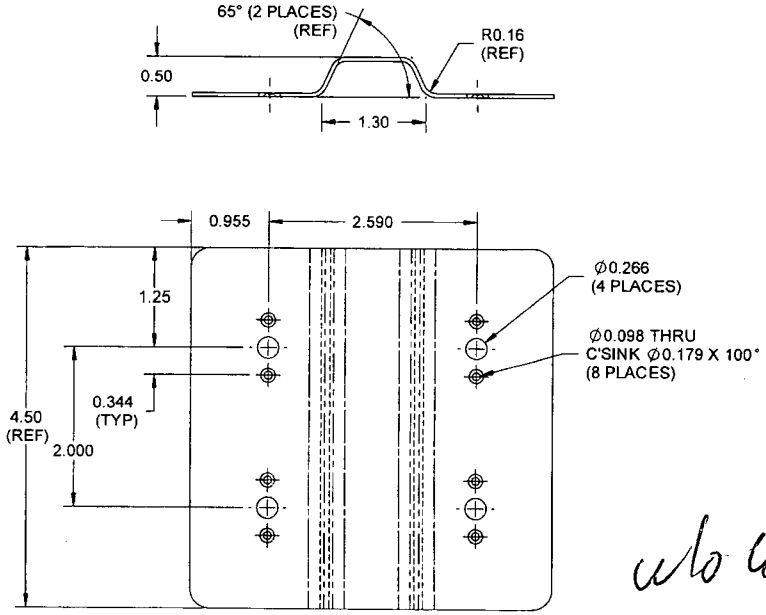

D3637-3 BRACKET
(WAS GENEVA P/N G10609-1)

wo 46859

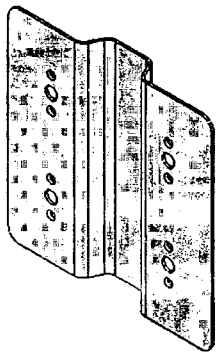

D3637-3 NOTES:
1) MATERIAL: 2024-T3 ALUMINUM 0.050 THICK PER QQ-A-250/4 OR AMS 4037
(REF DART SPEC M2024T3S.050)
2) FINISH: CHEMICAL CONVERSION COAT PER DART QSI 005 4.1
3) TOLERANCES: PER DART QSI 018 UNLESS OTHERWISE NOTED
4) UNITS: INCHES UNLESS OTHERWISE NOTED
5) BREAK SHARP EDGES: 0.005 TO 0.010 MAX
6) IDENTIFICATION: IDENTIFY WITH DART P/N "D3637-3" USING FINE POINT PERMANENT INK MARKER
7) WEIGHT: 0.32 lbs

DESIGN	TS	DART AEROSPACE LTD HAWKESBURY, ONTARIO, CANADA
DRAWN		
CHECKED		DRAWING NO. D3637 — REV. B
MFG. APPR.		SHEET 3 OF 3
APPROVED		TITLE: BRACKET — SCALE 2:3
DE APPR.		
DATE	07.12.18	

Dart Aerospace Ltd

W/O:		WORK ORDER CHANGES					
DATE	STEP	PROCEDURE CHANGE	By	Date	Qty	Approval Chief Eng / Prod Mgr	Approval QC Inspector

Part No: _____ **PAR #:** _____ **Fault Category:** _____ **NCR:** Yes No **DQA:** _____ **Date:** _____

Resolution: _____ **Disposition:** _____ **QA: N/C Closed:** _____ **Date:** _____

NCR:		WORK ORDER NON-CONFORMANCE (NCR)						
DATE	STEP	Description of NC Section A	Corrective Action Section B			Verification Section C	Approval Chief Eng	Approval QC Inspector
			Initial Chief Eng	Action Description Chief Eng	Sign & Date			

NOTE: Date & initial all entries

H:\fFORMS\Quality Assurance\approved QA\NCRWO RevE